ASSEMBLY INSTRUCTION

C-1125
Marco

A x1PC 	B x1PC 	C x1PC 	D x1PC 	E x1PC 	F x4PCS 
Gx4PCS 	Hx5PCS 	J x1PC  5#	K x1PC  4#		

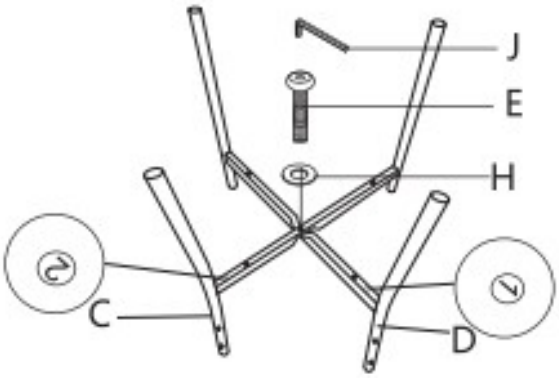

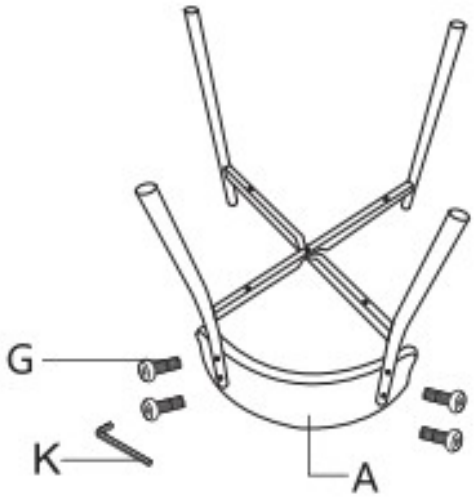

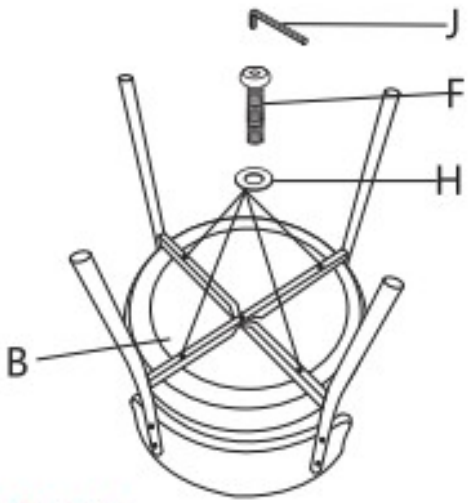

Salix Sp. z o. o.
Ligota Górna, ul.
Gorzowska 14 B,
46-200 Kluczbork, Poland
kontakt.salix@gmail.com

