SIEMENS

iQ700, Built-in oven with steam function, 60 x 60 cm, Black HS736G3B1





- ✓ fullSteam Plus – Fast and healthy steam-cooking.
- ✓ cookControl Pro – Excellent results, whatever the recipe or circumstances.
- ✓ roastingSensor Plus – Perfect roasting results.
- ✓ 4D hotAir: flexible choice of shelf.
- ✓ fastPreheat: reach the required baking temperature sooner; coolStart: no need to preheat the oven for deep frozen food.

Accessories

1 x enamel baking tray, 1 x grid, 1 x universal pan, size XL, punched, 1 x steam container, unpunched, size M

Optional accessories

AOVG9MC00S Mech. Child safety lock (Gap size:10mm), HZ32WA00 Wireless food thermometer, HZ530000 2 multipurpose pans, slim size, HZ531010 Baking tray, non-stick ceramic coated, HZ532010 Universal pan, non-stick ceramic coated, HZ617000 Pizza pan, enamelled, HZ629070 Air Fry & Grill tray, HZ631070 Baking tray, enamelled, HZ632070 Multipurpose pan, enamelled, HZ633001 Lid for professional pan, enamelled, HZ633070 Professional pan with grid, enamelled, HZ633073 Professional pan, enamelled, HZ635000 AirFry & Grill Set, HZ636000 Glass pan, HZ638D00 Full ext rails, level independent, steam, HZ664000 Baking and roasting grid (steam), HZ66D52 2 steamcontainer(punched/unpunched)sizeM, HZ66X650 Cover Strip, HZ915003 Glass roasting dish, 5,4 L, HZG0AS00 Connecting cable 3m

Technical data

Design: ..... Built-in
Door opening: ..... Drop down
Required niche size for installation (HxWxD): ..585-595 x 560-568 x 550 mm
Dimensions: ..... 595x594x548 mm
Dimensions of the packed product (HxWxD): ... 675 x 660 x 690 mm
Control Panel Material: .....Glass
Door Material: .....Glass
Net weight: ..... 39.2 kg
Length electrical supply cord: ..... 120 cm
EAN code: 4242003902547
Fuse protection: .....16 A
Voltage: .....220-240 V
Frequency: .....50; 60 Hz
Plug type: ..... Gardy plug w/ earthing
Usable volume (of cavity) - NEW (2010/30/EC): .....71 l
Energy efficiency: .....A+: efficient
Energy consumption per cycle conventional (2010/30/EC): .....0.87 kWh/cycle
Energy consumption per cycle forced air convection (2010/30/EC): 0.69 kWh/cycle
Energy efficiency index (2010/30/EC): ..... 81.2 %
Included accessories: 1 x enamel baking tray, 1 x grid, 1 x universal pan, 1 x steam container, punched, size XL, 1 x steam container, punched, size M, 1 x steam container, unpunched, size M

4 242003 902547

iQ700, Built-in oven with steam function, 60 x 60 cm, Black
HS736G3B1

Type of oven / heating system:
- Combi-steam oven with 22 heating methods: 4D hot air, Conventional cooking, hot air grilling, Full width grill, Half width grill, Intensive hot air, Deep-frozen food special, Bottom heat, low temperature cooking, Plate warming setting, Hold warm setting, Hotair gentle, Conventional heat gentle, steam 100%, regeneration, fermentation, defrost, Hot air grilling, warming, 4D Hot air, Conventional heat
- Temperature range 30 °C - 250 °C
- 120 °C
- Cavity volume: 71 l

Hook-in racks / rails
- Number of shelf levels: 5 PC
- Accessory

Design:
- Touch control
- Cavity inner surface: enamel anthracite

Cleaning:
- Ecolyse features: back panel
- hydrolyse program

Comfort:
- Oven Assistant with Voice Control
- LED clock and automatic programmer
- Temperature proposal
- Actual temperature display
- Heating-up control
- Drop down door, soft closing, soft opening
- Supporting systems: Dish categories
- yes
- Rapid heating-up
- coolStart
- steam boost - add for 3min intensive steam with a touch of a button.
- There are different steam intensities selectable: steam level high, steam level middle, steam level low
- LED light, Independent oven interior light button
- Yes
- Integral cooling fan
- WLAN

Accessory:
- 1 x universal pan, 1 x steam container, punched, size M, 1 x steam container, unpunched, size M, 1 x enamel baking tray, 1 x grid, 1 x steam container, punched, size XL

Comfort and Safety:
- Maximum window temperature 40° C
- Triple glazed door with heat reflective glass CoolTouch door
- Child safety button
- Automatic safety switch off
- residual heat indicator
- start button
- door contact switch

Technical Info:
- Length of mains cable: 120 cm
- Nominal voltage: 220 - 240 V
- Total connected load electric: 3.6 KW
- Energy efficiency rating (acc. EU Nr. 65/2014): A+
- Energy consumption per cycle in conventional mode: 0.87 kWh
- Energy consumption per cycle in fan-forced convection mode: 0.69 kWh
- Number of cavities: 1
- Heat source: electrical
- Cavity volume: 71 l

Dimensions:
- Appliance dimension (hxwxd): 595 mm x 594 mm x 548 mm
- Niche dimension (hxwxd): 560 mm - 568 mm x 585 mm - 595 mm x 550 mm
- “Please reference the built-in dimensions provided in the installation drawing”

SIEMENS

iQ700, Built-in oven with steam function, 60 x 60 cm, Black
HS736G3B1

Installing two appliances on top of each other
Air exchange

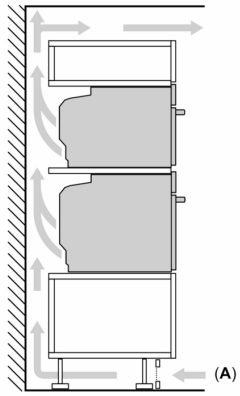

A: Air inlet ≥ 200 cm²

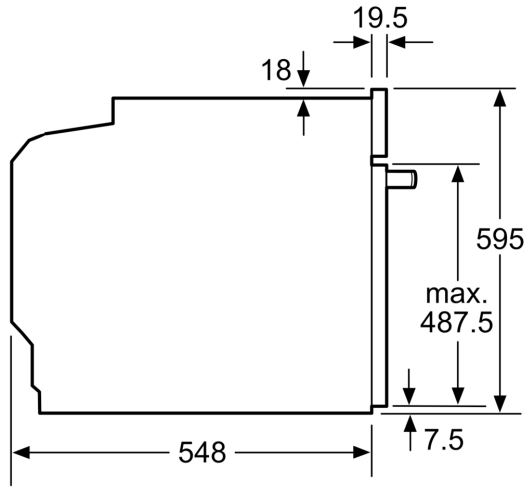

measurements in mm

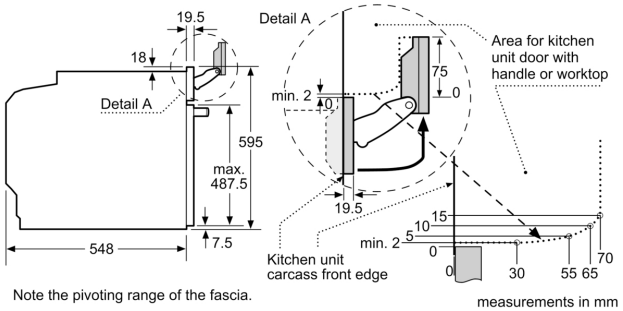

Note the pivoting range of the fascia.

measurements in mm

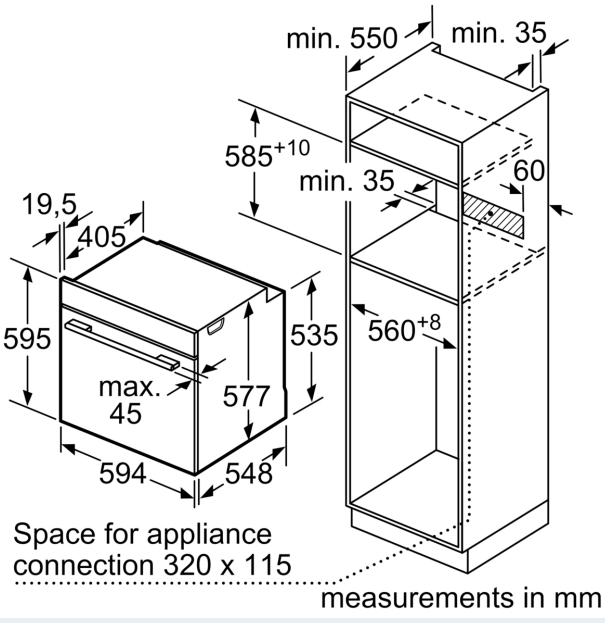

measurements in mm

SIEMENS

If the appliance will be installed underneath a hob, the following worktop thicknesses (including substructure if necessary) must be taken into account.

Hob type	**min. worktop thickness**	
	fitted	flush
Induction hob	37 mm	38 mm
Full surface Induction hob	47 mm	48 mm
Gas hob	30 mm	38 mm
Electric hob	27 mm	30 mm

