Kamado Outdoor Oven and BBQ

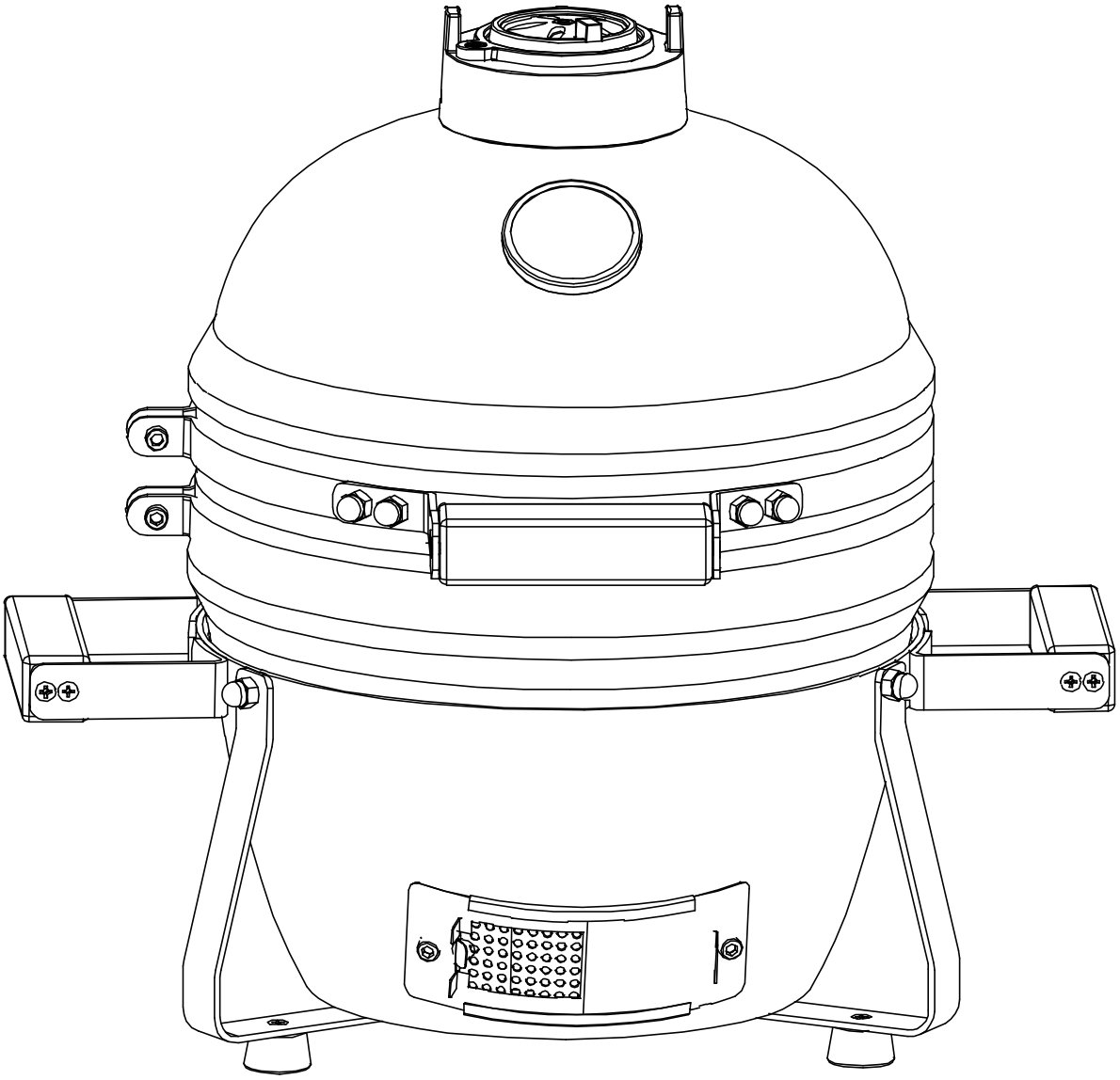

User Instructions - Please keep for future reference

IMPORTANT – Carefully remove any packaging before use, but retain the safety instructions.
These instructions form part of the product.
Please take note of all of the safety warnings listed in these instructions.
Please read these instructions in their entirety and retain them for future reference.
These instructions should be stored with the product.
This product is for domestic use **ONLY** and should not be used commercially or for contract purposes.

ABOUT YOUR KAMADO

Kamado cookers are extremely versatile. Not only can they be used for grilling or smoking but also pizzas, bread, pies and cookies can be baked effortlessly inside them. Due to their excellent heat retention properties, high temperatures can be achieved and maintained by precise contol of airflow via the top and bottom vents. High temperatures are ideal for fast cooking burgers and sausages whilst low heats will cook larger joints over a longer period of time. Why not try adding some wood chips to the charcoal or try combining different flavour wood chips to make your meats even more flavoursome.

WARNINGS – CAUTION!

- **This product is intended FOR OUTDOOR USE ONLY. DO NOT use indoors.**
- **WARNING !ALWAYS keep children and pets at a safe distance from the oven when in use.**
- **NEVER leave a burning fire unattended.**
- **DANGER of carbon monoxide poisoning – NEVER light this product or let it smoulder or cool down in confined spaces.**
- **DO NOT use this product in a tent, caravan, car, cellar, loft or boat.**
- **DO NOT use under any awnings, parasols or gazebos.**
- **FIRE HAZARD – Hot embers may emit while in use.**
- **WARNING ! - DO NOT use spirit or petrol for lighting or re-lighting ! Use only firelighters complying to EN 1860-3 !**
- **It is highly recommended that you use lump charcoal in your Kamado. It burns for longer and produces less ash which can restrict the airflow.**
- **DO NOT use coal in this product.**
- **IMPORTANT: When opening the lid at high temperatures it is essential to lift the lid only slightly, allowing air to enter slowly and safely, preventing any backdraft or flare-ups that may cause injury.**
- **DO NOT use the Kamado on decking or any other flammable surfaces such as dry grass, wood chips, leaves or decorative bark.**
- **Ensure that the Kamado is positioned at least 2 metres away from flammable items.**
- **DO NOT use this Kamado as a furnace.**
- **WARNING ! This product will become very hot, DO NOT move it during operation.**
- **ALWAYS USE heat resistant gloves, especially handling air vent, hot ceramics or cooking surface.**
- **Allow the unit to cool down completely before moving or storing.**
- **Always inspect the unit prior to use for fatigue and damage and replace as and when necessary.**
- **The Maximum amount of charcoal for these barbecue is 1 kgs.**

EXTINGUISHING

- To extinguish unit – stop adding fuel and close all the vents and the lid to allow the fire to die natuarally.
- **DO NOT** use water to extinguish the charcoals as this could damage the ceramic Kamado. **MAINTENANCE**
- Tighten the bands and oil the hinge 2 times a year or more if needed.

LIGHTING, USAGE AND CARE INFORMATION

- Ensure the Kamado is positioned on a permanent, flat, level, heat resistant non-flammable surface away from flammable items.
- Ensure the Kamado has a minimum of 2m overhead clearance and has a minimum 2m clearance from other surrounding items.
- To start a fire place rolled up newspaper with some lighter cubes or solid firelighters on the charcoal plate in the base of the Kamado. Then place 1 or 2 handfuls of lump charcoal over the top of the newspaper. Maximum amount of lump charcoal: 0.4kg.
- **DO NOT** use petrol, spirit, lighter fluid, alcohol or other similar chemicals for lighting or relighting.
- Open the bottom vent and light the newpaper using a long nosed lighter or safety matches. Once it has caught, leave the bottom vent and lid open for about 10 minutes to build a small bed of hot embers.
- It is recommended you don't stoke or turn the coals once they are alight. This allows the charcoals to burn more uniformly and efficiently.
- Once alight **ONLY** use heat resistant gloves when handling hot ceramics or cooking surfaces.
- See below for cooking instuctions depending on temperature and duration.
- The recommendation that the barbecue shall be heated up and the fuel kept red hot for at least 30 min prior to the first cooking.
- The correct lighting procedures including the statement "do not cook before the fuel has a coating of ash".

REFUELLING

- With the vents closed, the Kamado stays at a high temperature for several hours. If you require a longer cooking time (e.g when roasting a whole joint or slow smoking), it may be necessary to add more charcoal. Just add some additional charcoal and continue.

COOKING TEMPERATURE GUIDE

Slow cook / Smoke (110ºC-135ºC)		Top vent	Bottom vent
Beef Brisket	2 Hrs per lb.		
Pulled Pork	2 Hrs per lb.		
Whole Chicken	3-4 Hr.		
Ribs	3-5 Hrs.		
Roasts	9+ Hrs.		

Grill / Roast (160ºC-180ºC)		Top vent	Bottom vent
Fish	15-20 Min.		
Pork Tenderloin	15-30 Min.		
Chicken Pieces	30-45 Min.		
Whole Chicken	1-1.5 Hrs.		
Leg of lamb	3-4 Hrs.		
Turkey	2-4 Hrs.		
Ham	2-5 Hrs.		

Sear (260ºC-370ºC)		Top vent	Bottom vent
Steak	5-8 Min.		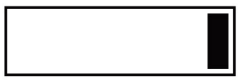
Pork Chops	6-10 Min.		
Burgers	6-10 Min.		
Sausages	6-10 Min.		

Open ○ Closed ●

Parts list

1 (1x)

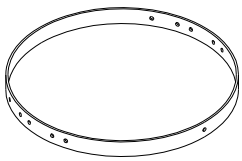

2 (3x)

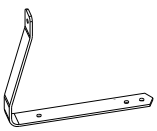

3 (1x)

4 (2x)

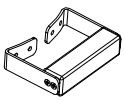

5 (1x)

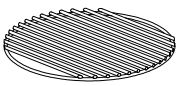

6 (1x)

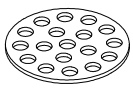

7 (1x)

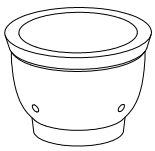

8 (1x)

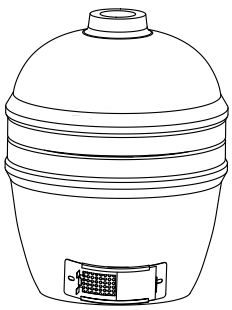

9 (1x)

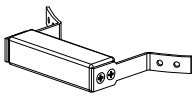

10 (1x)

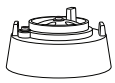

A (17x) 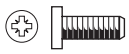 M6x14

B (17x) M6

Assembly instructions

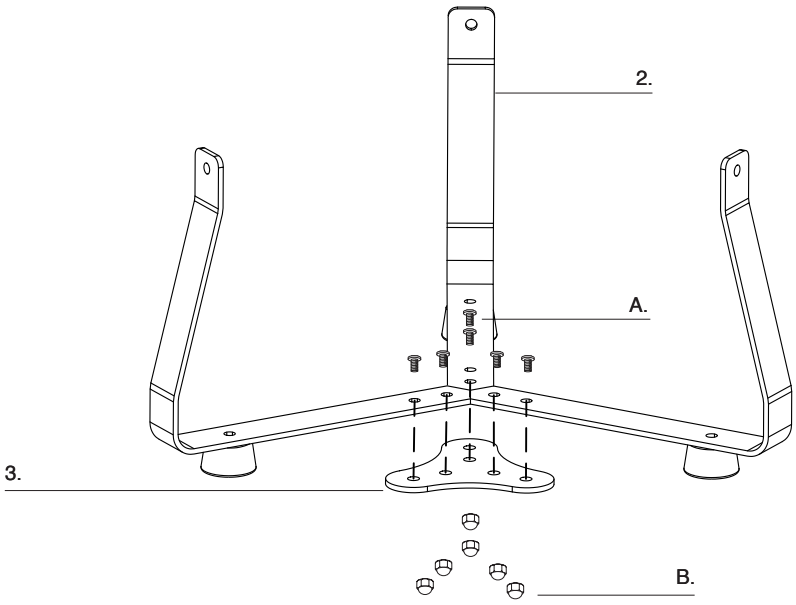

Assembly instructions

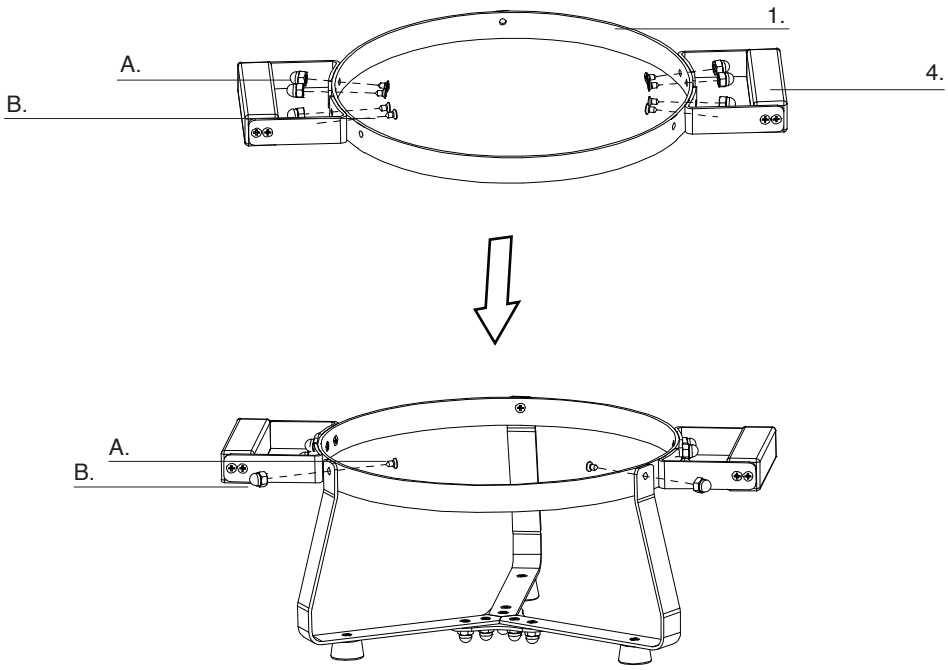

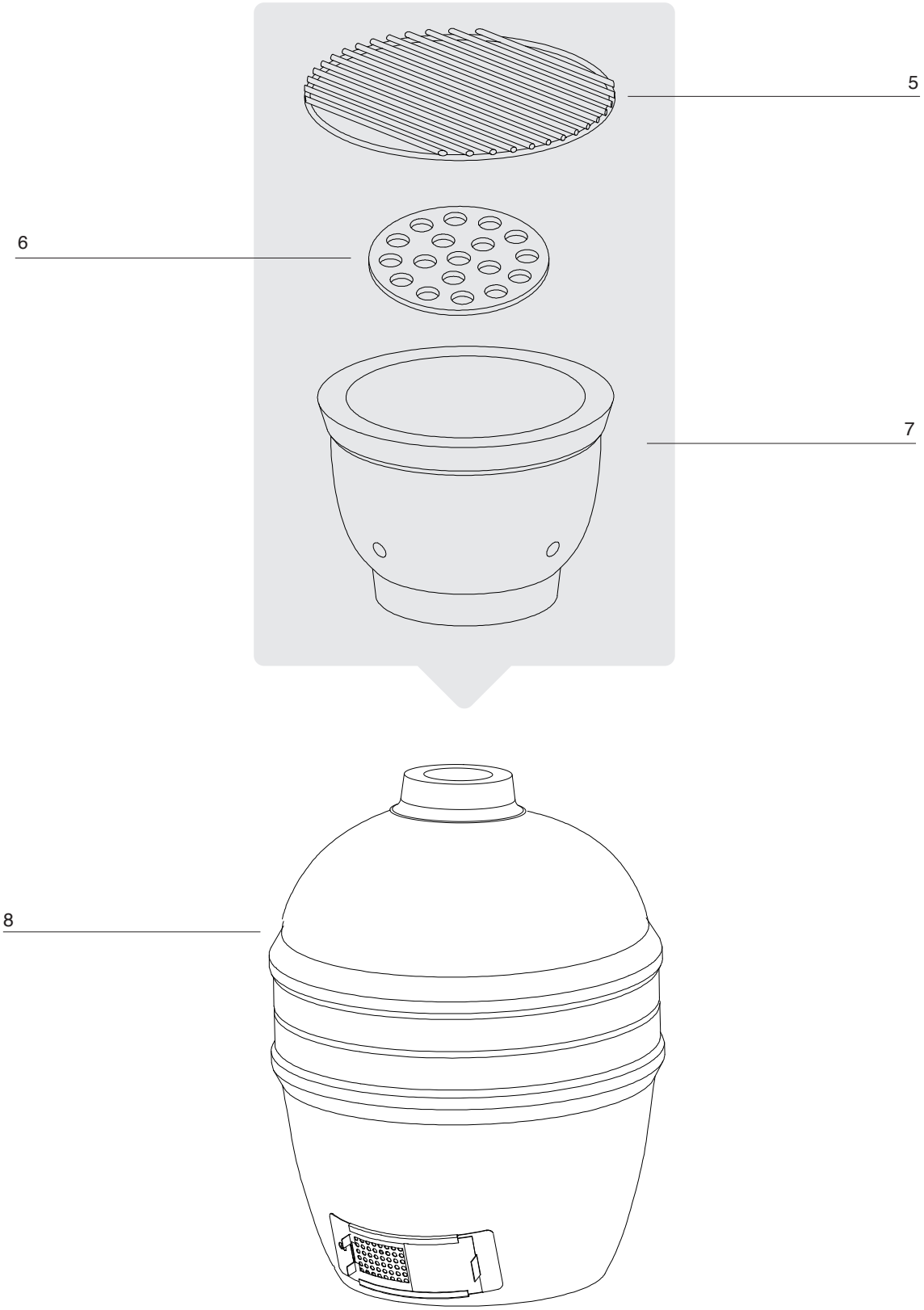
5
6
7
8

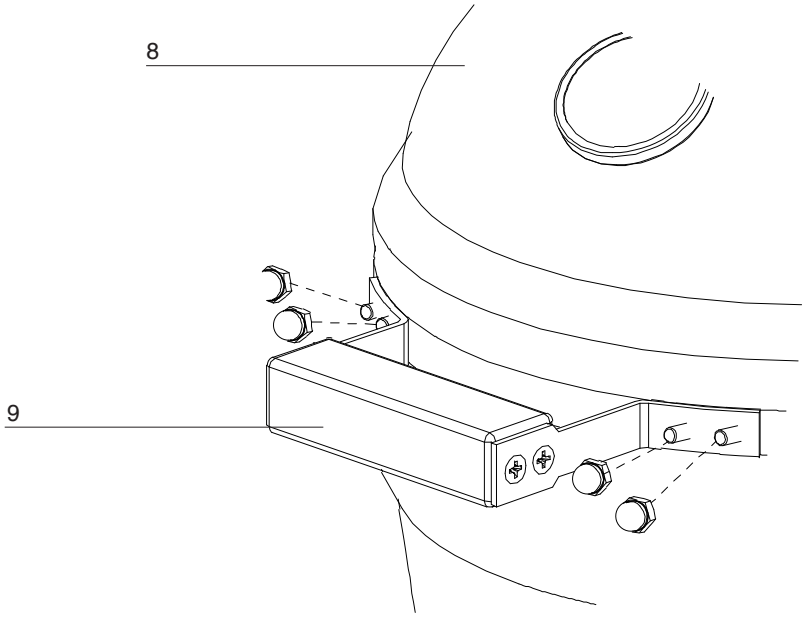
8
9

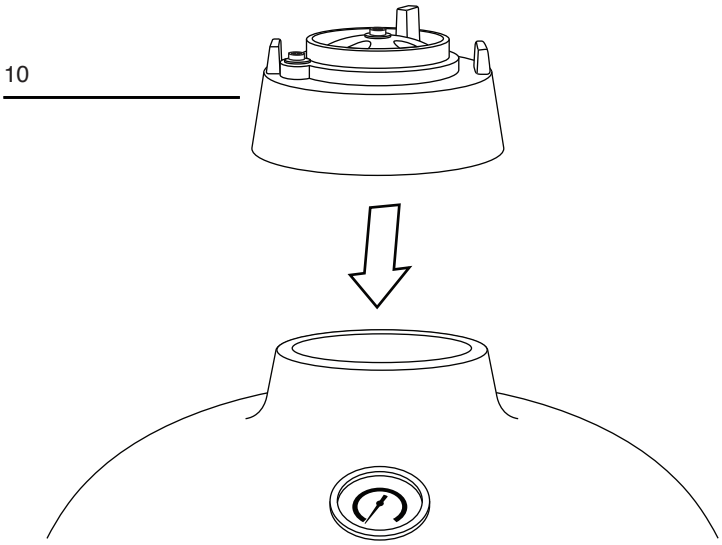
10

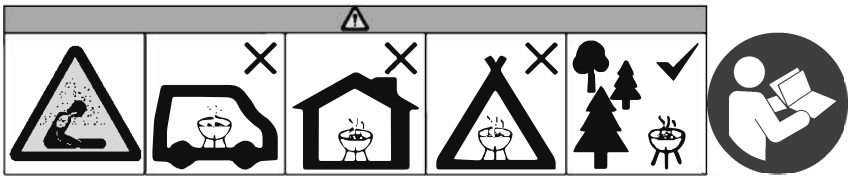

- Upon close inspection, the finish of your ceramic BBQ may appear to have crack lines. This is **NO** cracking of the ceramic. This is known as “crazing” and is caused by a different coefficient of expansion between the glaze finish and the clay. The spider-web pattern of “crazing” is different from a crack in the aspect that it cannot be felt on the surface, unless using a fingernail; however it does become more visually apparent when the surface is dusty or magnified. While this "crazing"

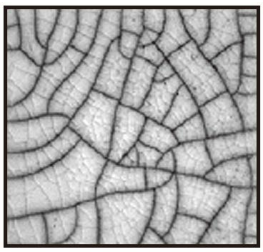

may appear as imperfections, crazing does not affect the performance of life span of your ceramic BBQ; therefore it can't be claimed as a warranty issue. The process of crazing effectively increased the toughness of the unit.

Long-term maintenance

- The wood side shelves should be covered when not in use and may require refinishing from time to time.
- Routinely check the spring assist band to make sure all the bolts are tight and secure.
- When moving the barbecue, ensure to unlock the castors first. Do not push to move. Pull from the back hinge instead of the handle in the front.
- Do not remove the fire bowl. The purpose of the fire bowl is to hold the lump charcoal and will continue to work even if it is cracked.

WARNING!: The bottom of grill will be hot, pls don't put it close to inflammable substance.