ORTISEI

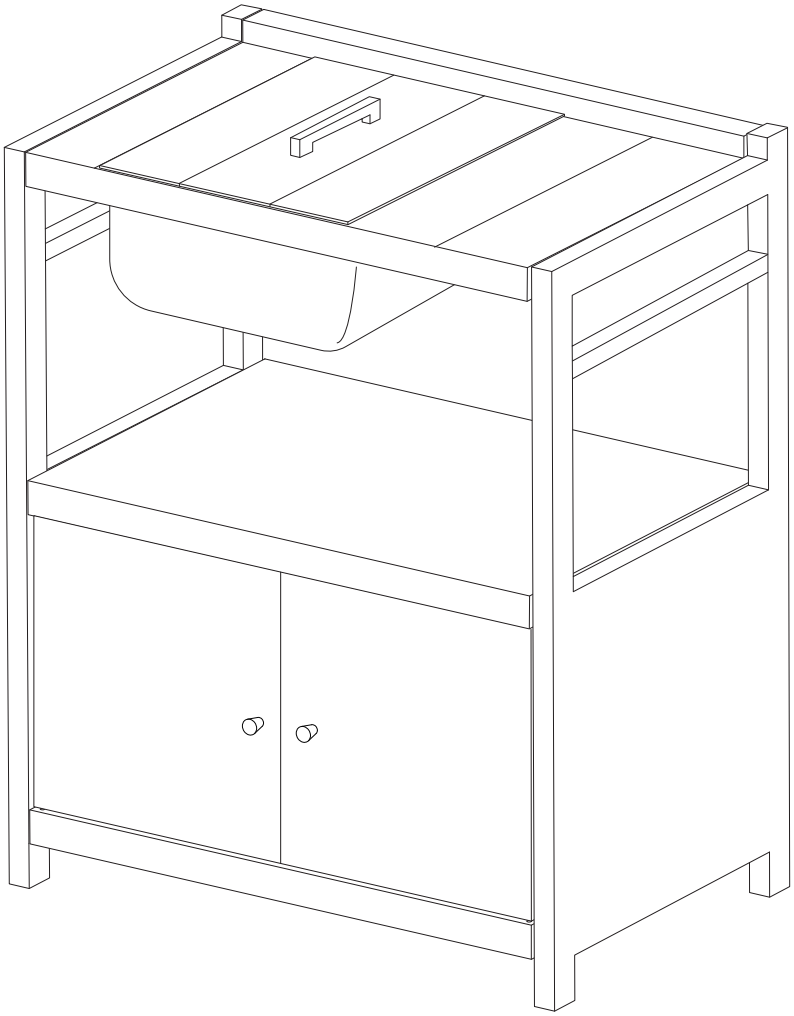

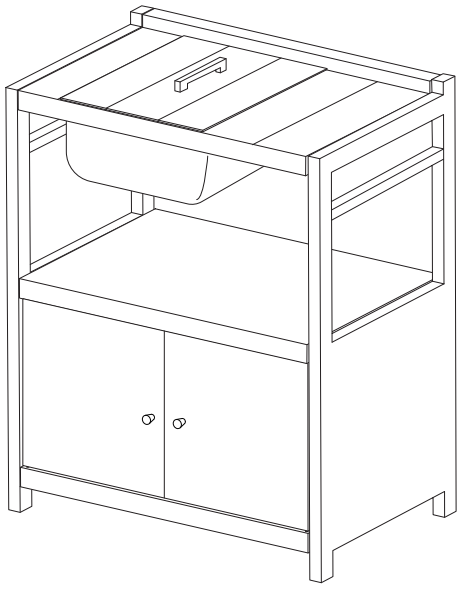

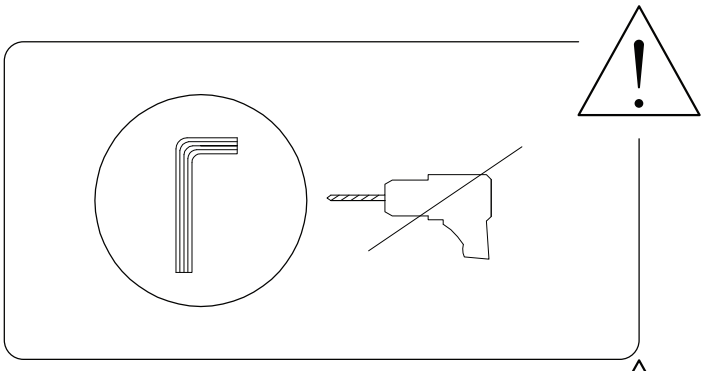

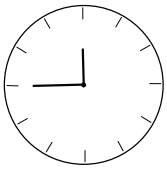

45'

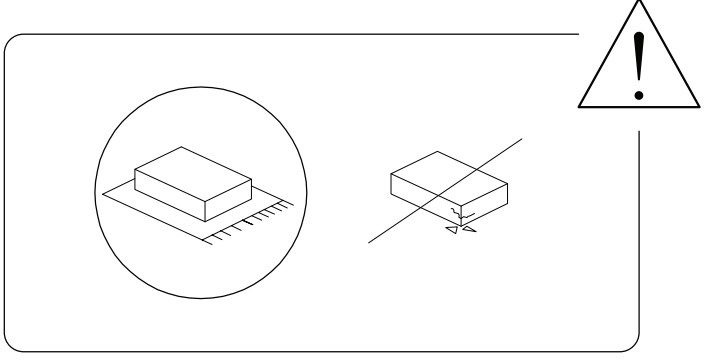

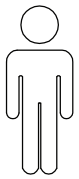

2

2296/ORTISEI/260824/

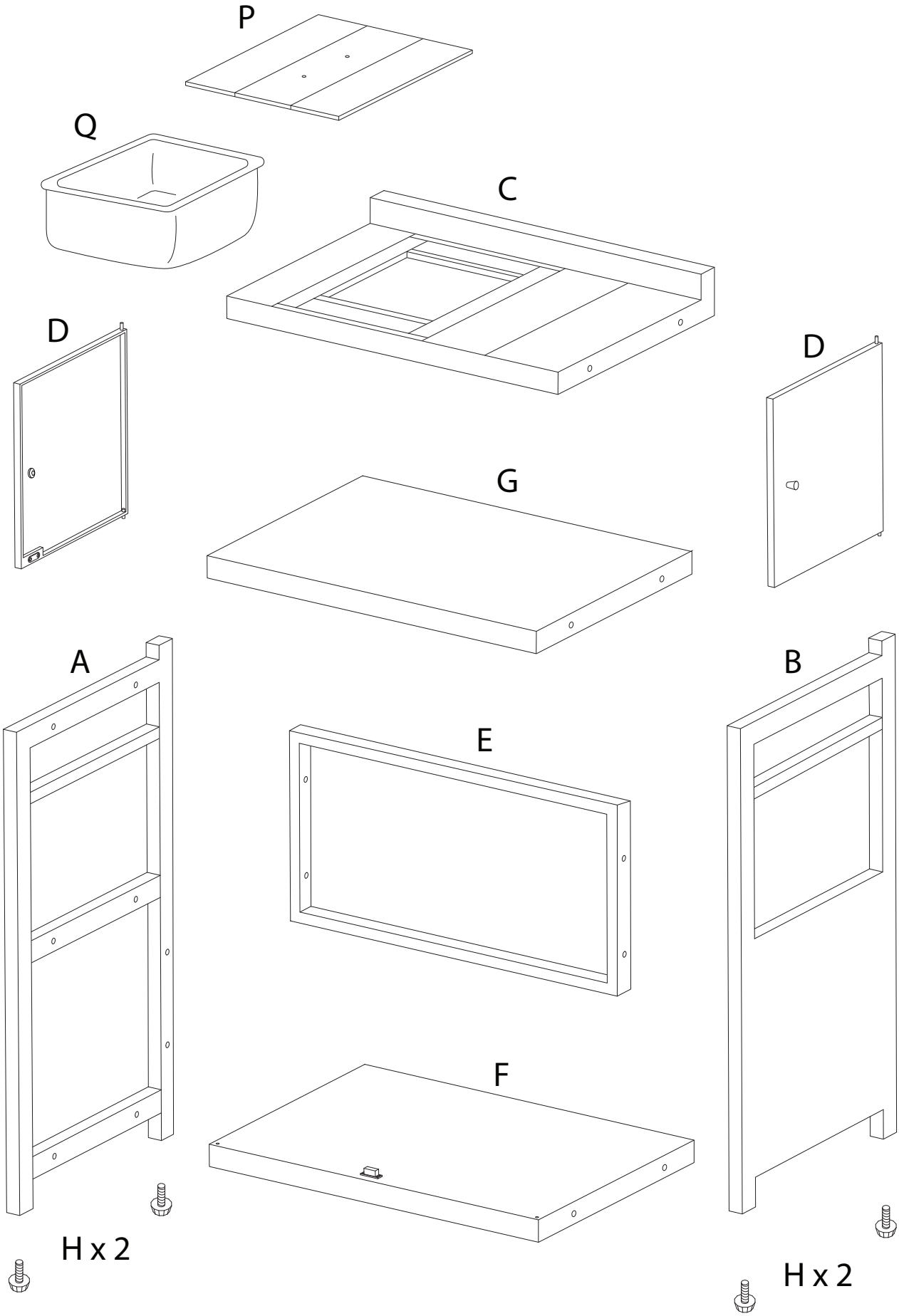

2296/ORTISEI/260824/

A	B	C	D
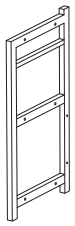	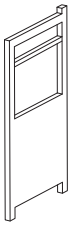	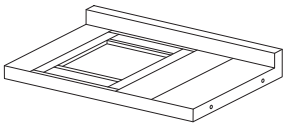	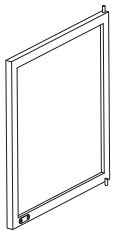
x 1	x 1	x 1	x 2
E	**F**	**G**	**H**
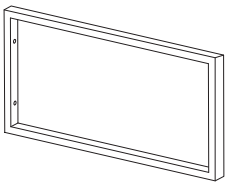	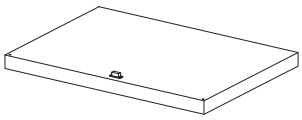	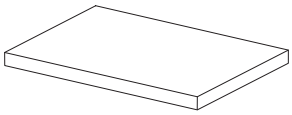	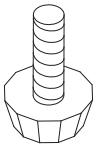
x 1	x 1	x 1	x 4
I	**J**	**K**	**L**
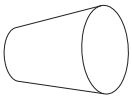	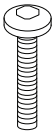 M6 x 30	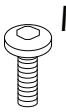 M6 x 15	 M4 x 10
x 2	x 4	x 12	x 2
M	**N**	**O**	**P**
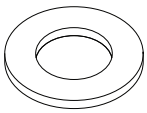	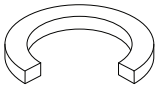		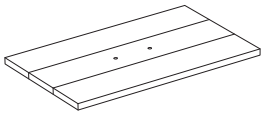
x 16	x 4	x 1	x 1
Q	**R**	**S**	**T**
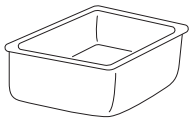	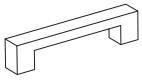	 M4 x 20	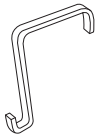
x 1	x 1	x 2	x 3

1

A	B	H
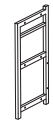	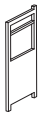	
x 1	x 1	x 4

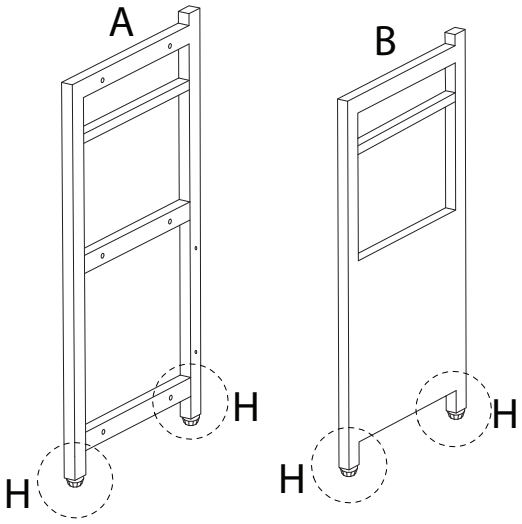

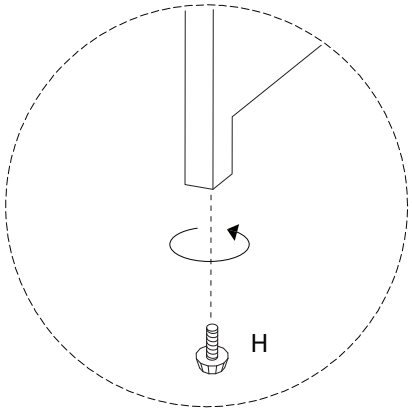

2

F	K	M	O
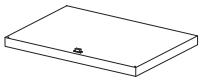	 M6 x 15		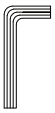
x 1	x 4	x 4	x 1

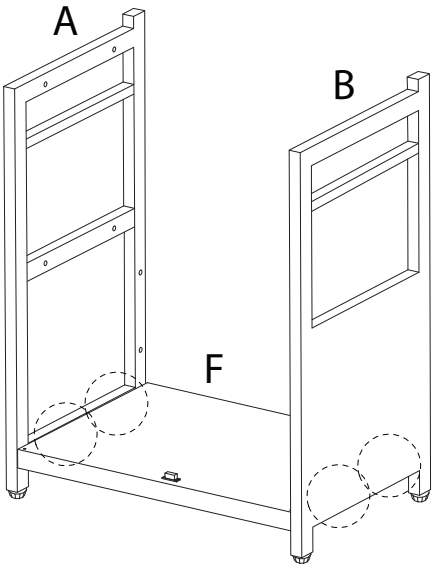

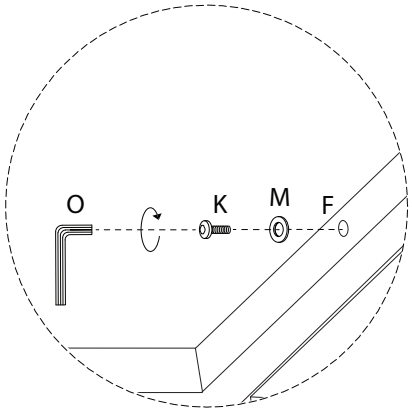

2296/ORTISEI/260824/

3

E	K	M	O
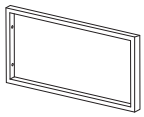	 M6 x 15	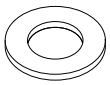	
x 1	x 4	x 4	x 1

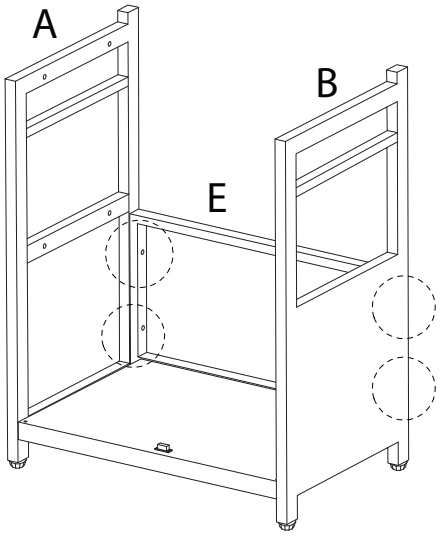

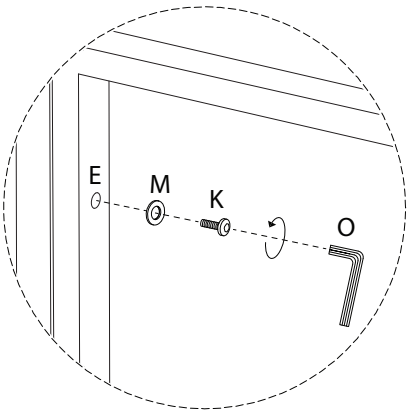

4

D	I	L	O
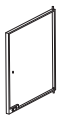		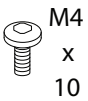 M4 x 10	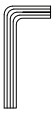
x 2	x 2	x 2	x 1

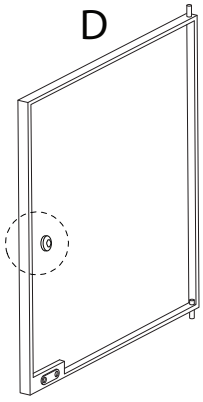

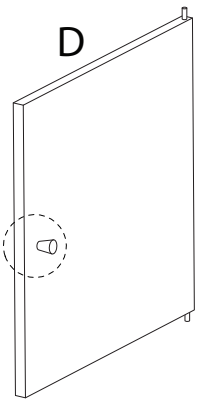

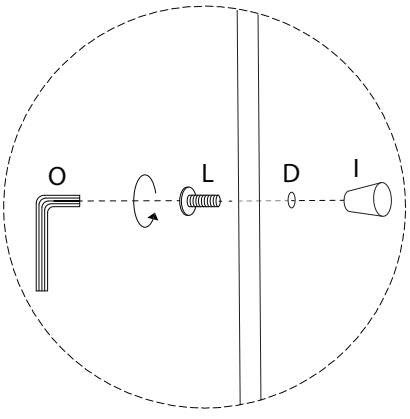

2296/ORTISEI/260824/

5

N

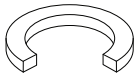

x 4

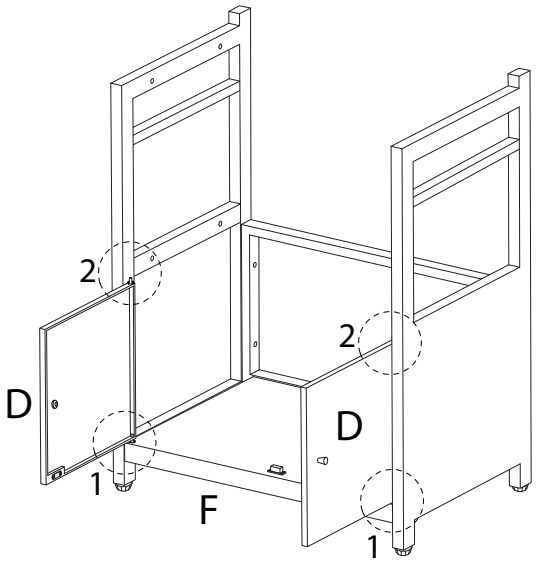

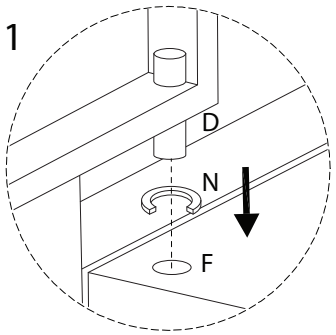

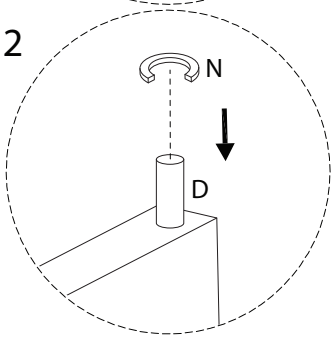

6

G	K	M	O
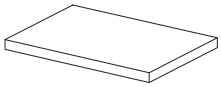	 M6 x 15	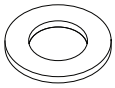	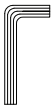
x 1	x 4	x 4	x 1

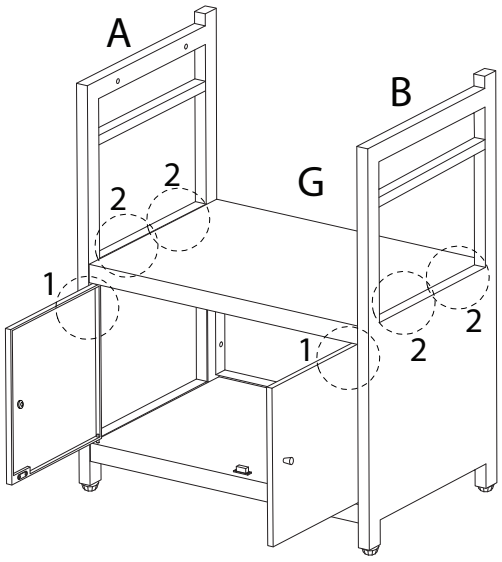

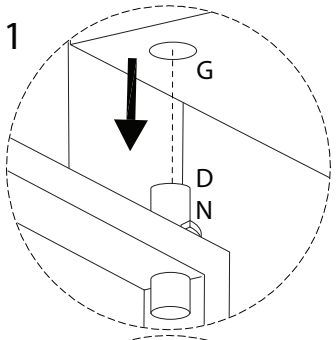

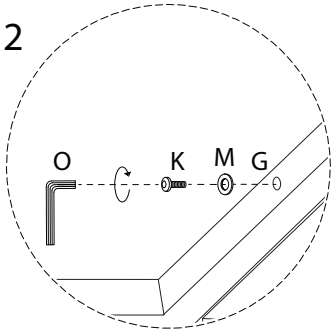

2296/ORTISEI/260824/

7

C	J	M	O
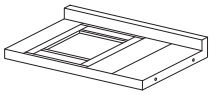	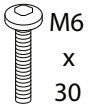 M6 x 30	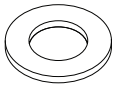	
x 1	x 4	x 4	x 1

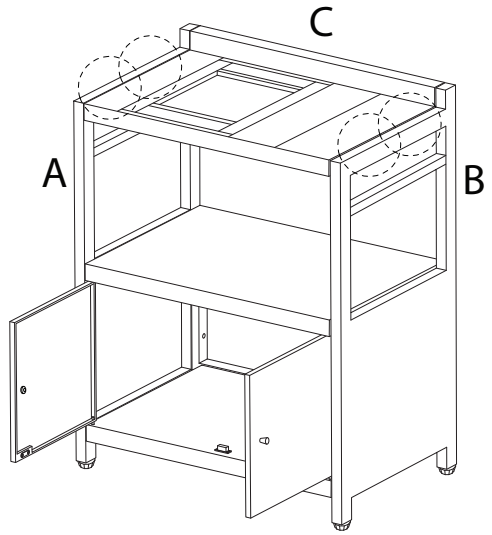

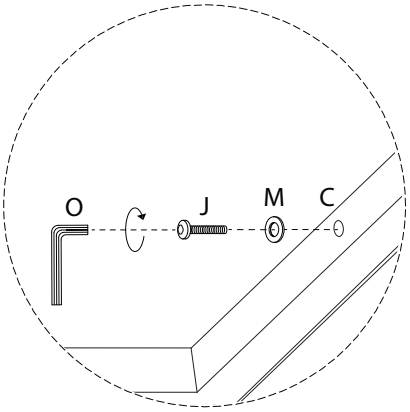

8

P	R	S	O
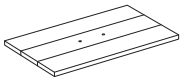	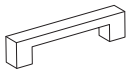	 M4 x 20	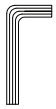
x 1	x 1	x 2	x 1

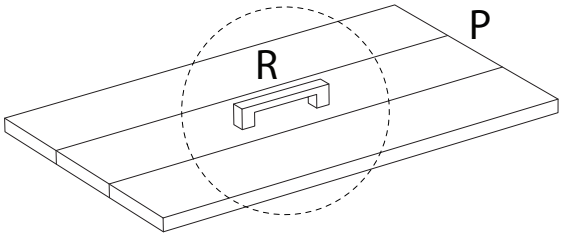

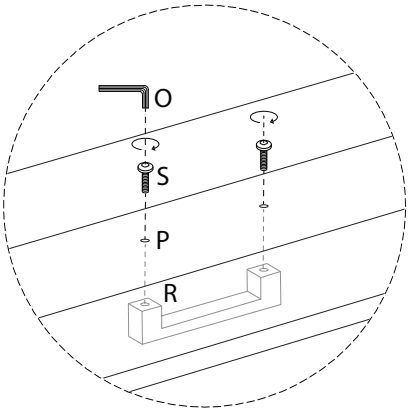

2296/ORTISEI/260824/

9

Q

x 1

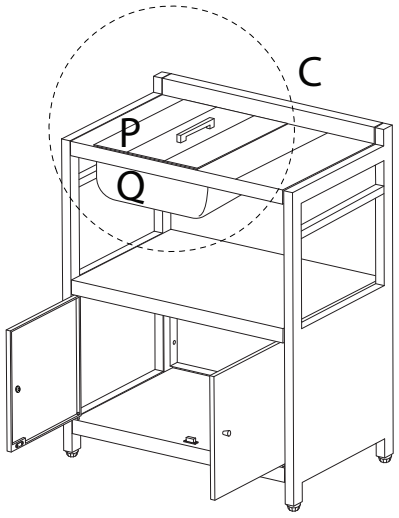

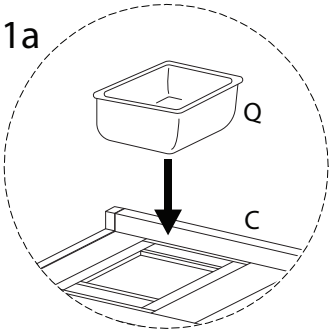

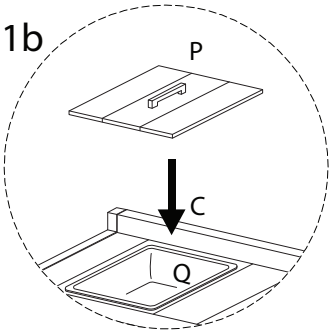

!

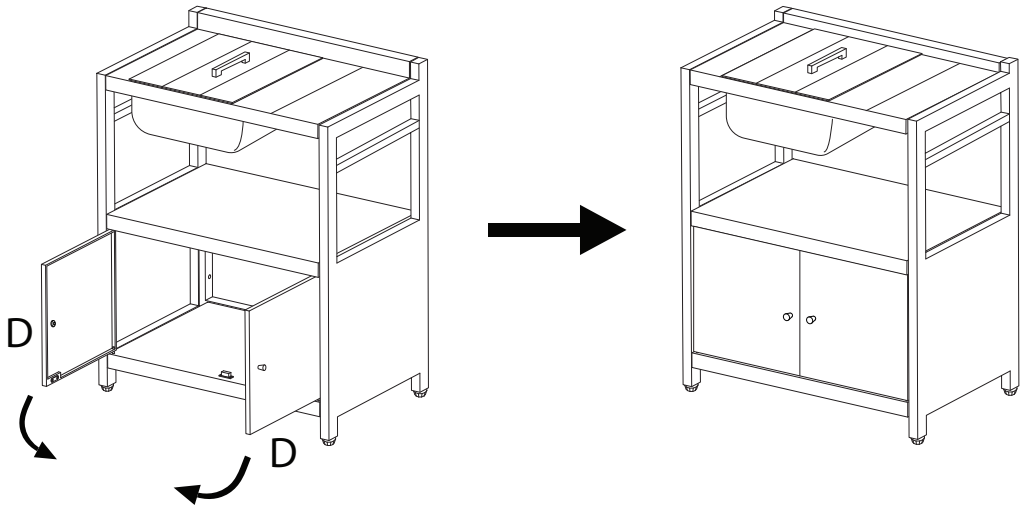

2296/ORTISEI/260824/

10

T



x 3

