# Assembly Instruction

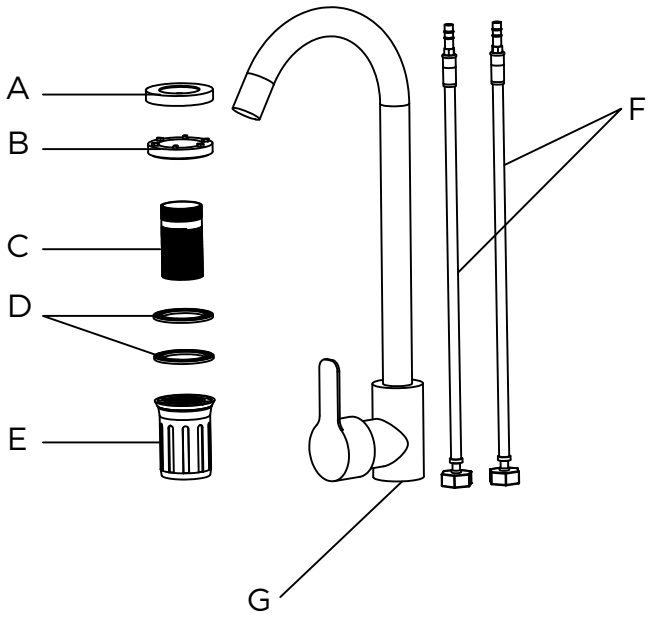


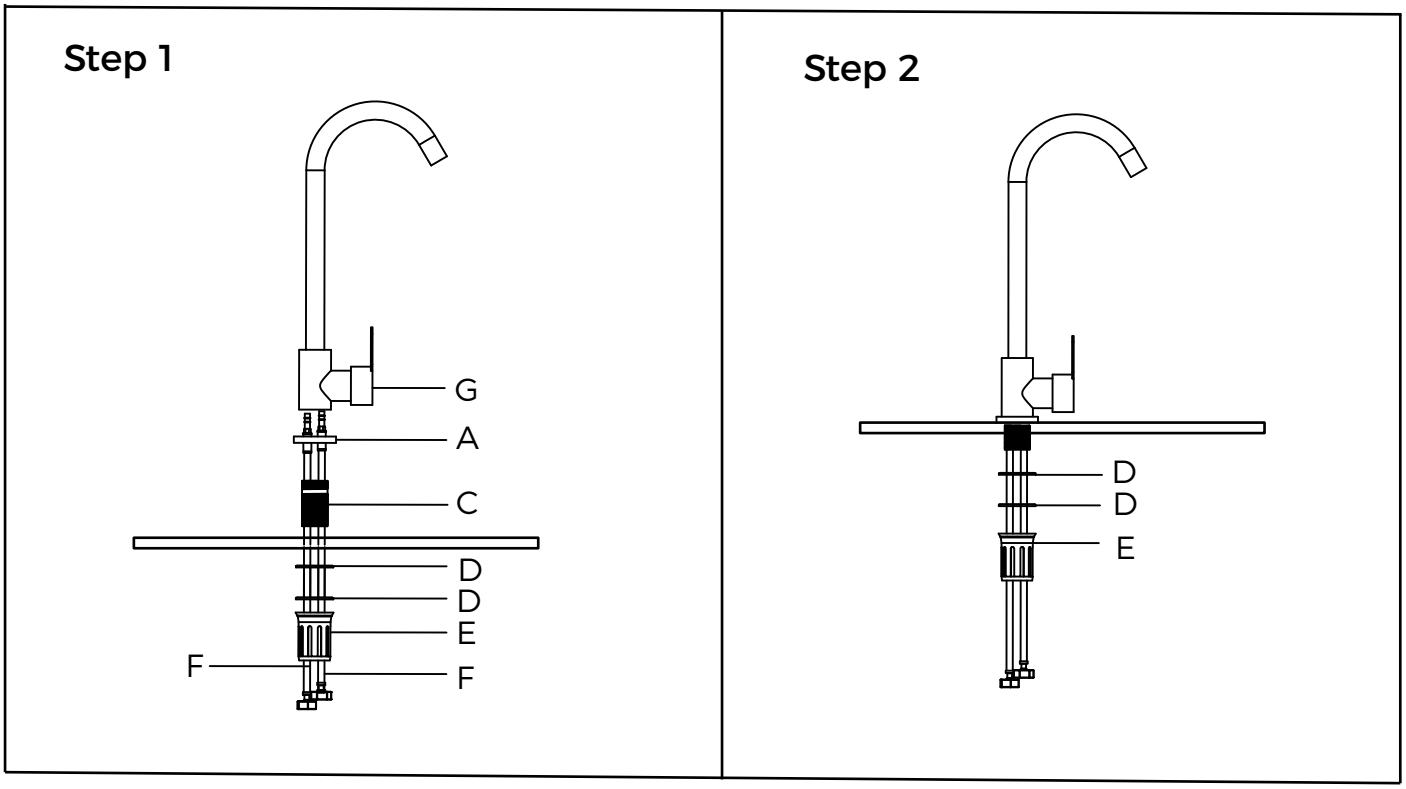


## There is some notes when connecting hose to the inlet tube

1、Cleaning the tube。

2、It should be smooth on the entrance of inlet tube 。

3、It is forbidden to use raw tape and any sealing material when connecting the hose to inlet tube.

4、When connecting hose to the hexagonal nut of the water inlet hose, be careful not to use excessive force, otherwise the water inlet pipe will be damaged; and ensure that the hose is not tied tightly or severely folded during installation to avoid damaging the hose structure.

## Maintenance

1、Unscrew the mouth of the faucet to clean it to avoid blockage, if the outlet tube is blocked, it will leakage or damage the structure of the hose.

2、The working pressure of the faucet is 0.5-5kgf/CM*(Including cold and hot water)

| | | | | |
|---|---|---|---|---|
| Ax1  | Bx1  | Cx1  | Dx1  | Ex2  |
| Fx1  | Gx1  | Hx1  | I x1  | J x1  |

1

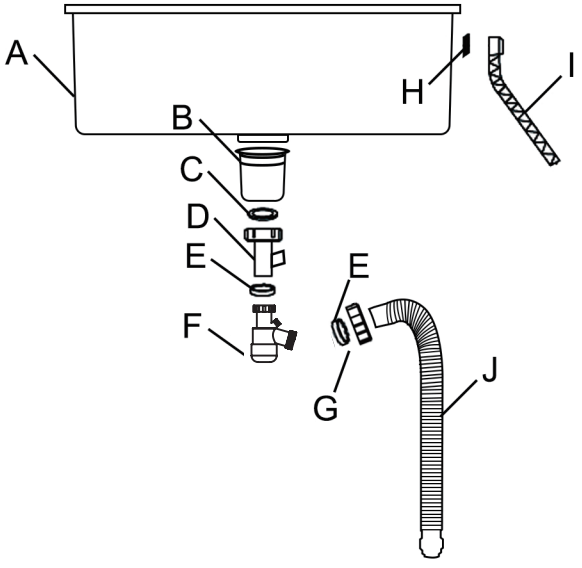


2

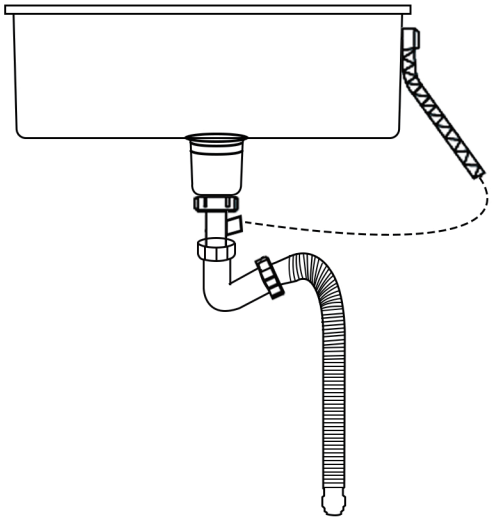

EN

# 1 Introduction

Conformance

This product conforms to EC Regulation 1935/2004 on materials and articles intended to come into contactwith food.

# 2 Warnings and personal safety

Care and use of kitchen sinks

- "Do's"
  - — Clean the sink everyday by thoroughly rinsing with a mild soap and warm water then wipe it dry.
  - — Rub lightly with a soft cloth in the direction of the grain lines on a regular basis for additional preventive cleaning.
  - — Keep the sink free of any standing water as this can cause a buildup of mineral deposits, which caraffect the appearance of your sink.
  - — Any stubborn stains should be removed by scrubbing in the direction of the grain using a mildabrasive such as Comet. Always rinse the sink thoroughly after using any cleaning agent and wipe itdry.
  - — Clean any mineral deposits built-up with a mild solution of vinegar and water followed by a thoroughflushing with water.
  - — Remove any scratches with a Scotch-Brite pad and cleaning agent rubbing in the direction of thegrain.NOT RECOMMENDED FOR MIRROR FINISH.
- "Do's"
  - — Do not allow food or beverage residue as well as metal canned products to remain on the sinksurface.
  - — Do not leave pots, steel cookware, or utensils in the sink for a lengthy period; iron particles ofterdevelop rust spots in the stainless steel surface.
  - — Do not use a steel wool or scouring pad as it damages the sink surface and causes discoloration.
  - — Do not set hot pans or other kitchen products directly in the sink.
  - — Never leave rubber mats, sponges, or cleaning pads in the sink overnight as this will trap water andcould stain and discolor the sink surface**.**
  - — Do not use any drain cleaning products containing sulfuric or hydrochloric acid as this will damagethe sink. Silver cleaners can also contain acids that could damage the sink surface.
  - — Never let the sink come into contact with water containing heavy metals which can make its coloifade or get it rusty.
  - — Never use the inside of the sink as a cutting surface

# 3 Installation instructions

Remarks: While installing, please apply sealant or adhesive tape on the screw thread in case of leaks

# 4 Maintenance and cleaning

After use. please clean the product by rubbing the stainless surface with a clean, damp cloth and wipe it dryAvoid fluoride from household products, bleach, food, silver cleaning materials, sulfur, and hydrochloric acidcleaning products which may cause potential corrosion damage on the sink