VILAMA

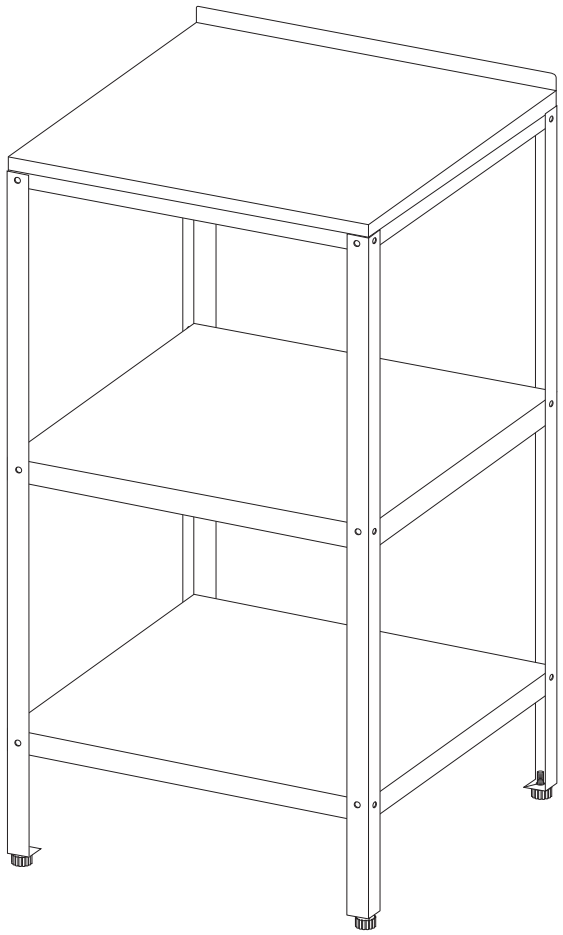

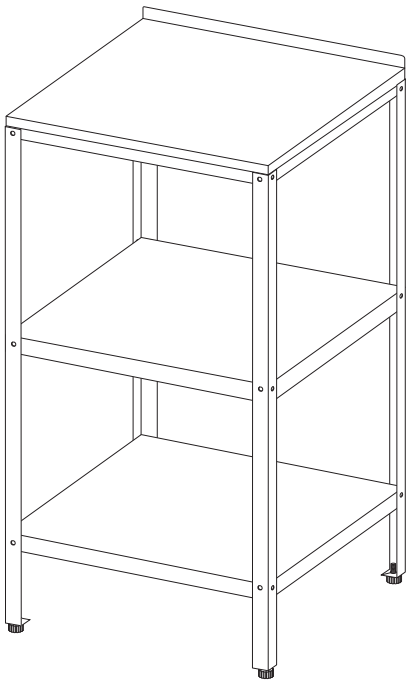

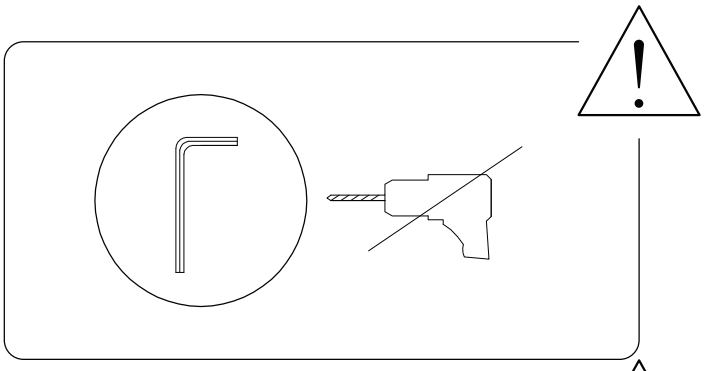

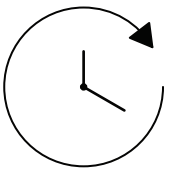

40'

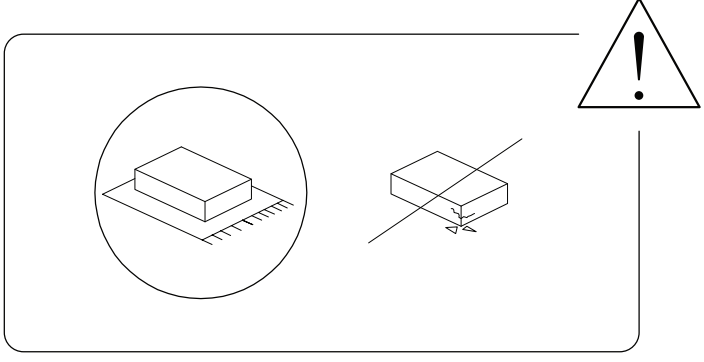

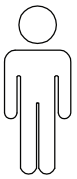

1

1	2	3
	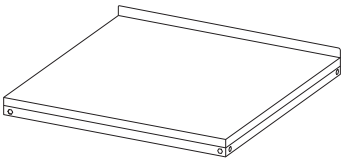	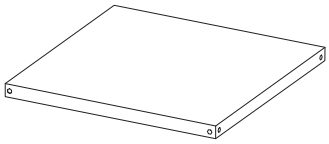
x 4	x 1	x 2

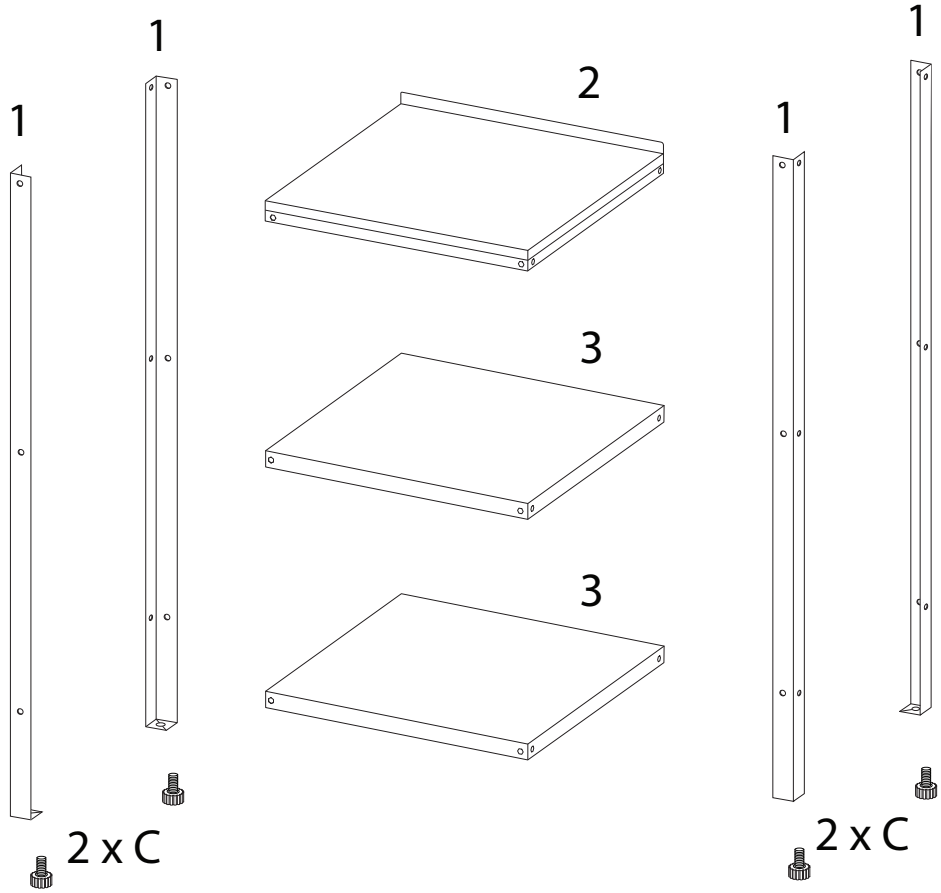

A	C	D
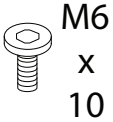 M6 x 10	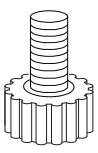	
x 24	x 4	x 1

1

1	3	A	D
	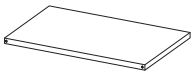		
x 4	x 2	x 16	x 1

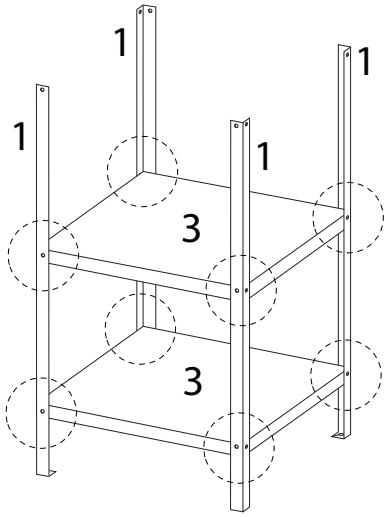

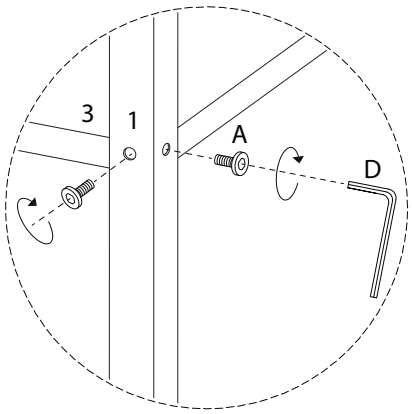

2

C
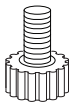
x 4

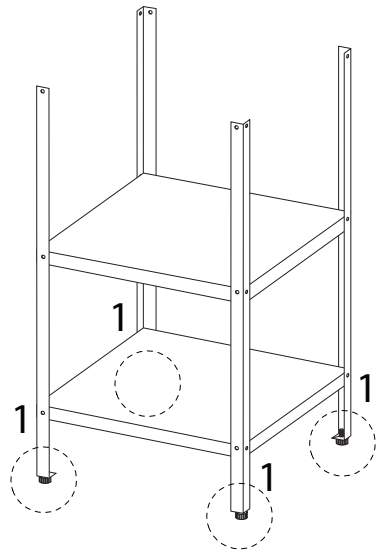

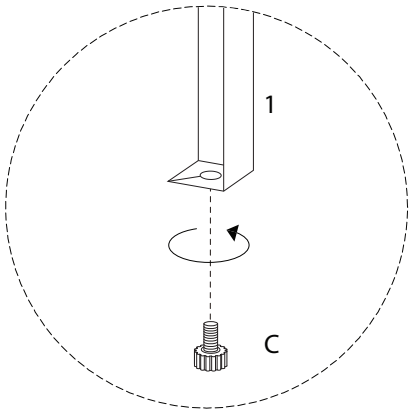

2296/VILAMA II/030225/

3

2	A	D
	 M6 x 10	
x 1	x 8	x 1

